AlphaESS
smarten your energy

V01

USER MANUAL OF
SMILE - G3 – T4/T5/T6/T8/T10

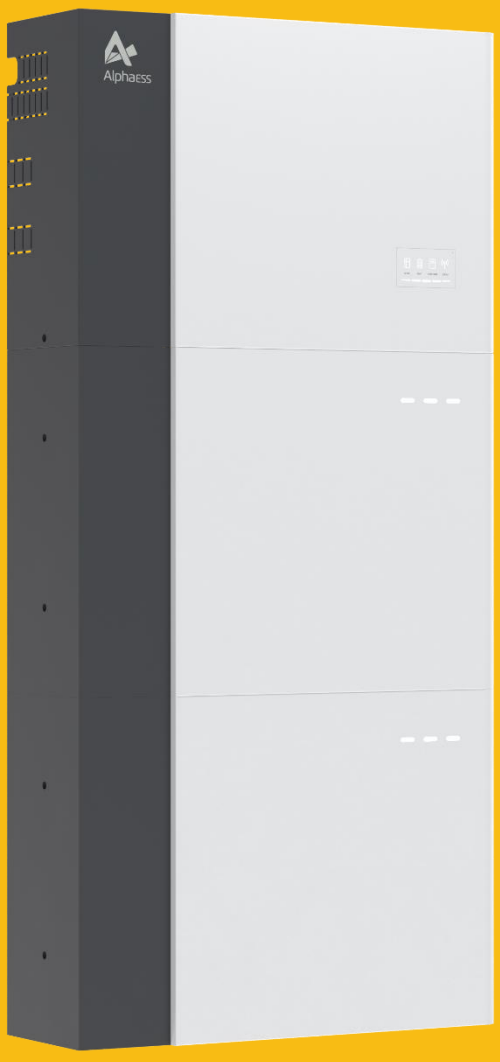

Copyright Statement

This installation manual is subject to the copyright of Alpha ESS Europe GmbH, with all rights reserved.

Limitation of Liability

Alpha ESS assumes no liability for personal injury, property damage, product damage, or consequential damage caused by failure to follow this manual, improper use of the product, repairs, opening of the cabinet, or any actions performed on the product by unqualified and non-Alpha ESS-certified electricians, or from the use of unauthorized spare parts.

Strictly follow all instructions and warnings, and keep this installation manual safe. Do not operate the system without having read all safety and operating instructions. It is prohibited to make unauthorized modifications or technical changes to the product.

Alpha ESS continuously strives to provide innovative system solutions to our customers. This installation manual is based on accurate and reliable information. However, due to product design and technical specification updates, our company reserves the right to make changes at any time without prior notice. This installation manual is for reference purposes only.

© Alpha ESS Europe GmbH 2015-2024

Content

1. Introduction 4

1.1. General Information 4

1.2. Abbreviations and Terms 4

1.3. Levels of Warning Messages 5

2. Safety 6

2.1. General Safety Instructions 6

2.2. General Hazard Sources 7

2.2.1. Safety Instructions for Battery 8

2.2.2. Response to Emergency Situations 12

2.2.3. Other Damage Cases 13

2.3. Symbols Explanation 14

3. Product Introduction and Application Scenarios 17

3.1. Naming Convention 17

3.2. System Introduction 18

3.3. Product Description 19

3.3.1. Inverter Electrical Interface & Connections Introduction 19

3.3.2. Inverter Display Interface Introduction 20

3.3.3. Battery Display Interface Introduction 22

3.3.4. Battery Introduction of SMILE-G3-BAT-8.2P 23

3.3.5. Einführung der Batterie SMILE-G3-BAT-3.8S 24

3.4. Application Scenarios 25

3.4.1. DC-Coupled Storage System 25

3.4.2. AC-Coupled Storage System 25

3.4.3. Hybrid-Coupled Storage System 26

3.4.4. Off-Grid Storage System 27

4. Online Monitoring for System Operators 28

4.1. Download and Install the App 28

4.2. Online Monitoring via Website and APP 28

4.2.1. Registration 28
4.3. Login 30
5. Commissioning 32
5.1. Checking before Power-On 32
5.2. Turning on the System 33
5.3. Shutting Down the System 33
6. Routine Maintenance 34
6.1. Maintenance Checklist 34
7. Maintenance and Troubleshooting 35
7.1. Routinewartung 35
7.2. Cleaning 36
7.3. Troubleshooting 36
7.3.1. Common Errors 36
7.3.2. Battery Protection Description for SMILE-G3-BAT-8.2P 42
7.3.3. Battery Protection Description for SMILE-G3-BAT-3.8S 44
8. Uninstallation & Return 45
8.1. Removing the Product 45
8.2. Packaging the Product 45
9. Disposal 46

1. Introduction

1.1. General Information

This document applies to the products of the single-phase energy storage system SMILE-G3, which includes the inverter SMILE-G3-T4-10 and the battery SMILE-G3-BAT-3.8S&8.2P.

Please read this user manual carefully to ensure safe and error-free operation of the G3-T14-10. The mechanical and electrical installation, as well as the initial operation of the storage system, must be carried out by a qualified and Alpha ESS-certified installer. To ensure accessibility to this user manual, it should always be kept near the storage system enclosure.

The images in this document are simplified representations of essential information and may differ from the actual product.

1.2. Abbreviations and Terms

A

- AC: Alternating Current
- APP: Application
- AUX: Auxiliary (additional input for free use)

B

- BAT: Battery
- BMS: Battery Management System

D

- DC: Direct Current

E

- EMS: Energy Management System

I

- INV: Inverter

P

- PV: Photovoltaic

1.3. Levels of Warning Messages

The following levels of warning messages may occur when handling the product.

DANGER DANGER indicates a hazardous situation that will result in death or serious injury if not avoided.
WARNING WARNING indicates a hazardous situation that could result in death or serious injury if not avoided.
CAUTION CAUTION indicates a hazardous situation that could result in minor or moderate injury if not avoided.
NOTICE NOTICE indicates a situation that could result in property damage if not avoided.
INFORMATION provides tips for the optimal installation and operation of the product.

2. Safety

2.1. General Safety Instructions

Read all instructions and safety information regarding the system and the relevant sections of this manual for operating the system.

WARNING! In the event of a ground fault, normally grounded conductors may become ungrounded and charged.

WARNING! This system is heavy and should be lifted by at least two people.

CAUTION! Authorized service personnel should reduce the risk of electric shock by disconnecting AC, DC, and battery power from the inverter before performing any work related to the inverter. Turning off the control device does not eliminate this risk. The built-in capacitors remain charged for up to 5 minutes after disconnection from power sources.

CAUTION! Under no circumstances should you attempt to disassemble the inverter, battery, or control unit yourself. These components do not contain user-serviceable parts. Attempting to service these parts may cause electrical shock or fire hazards and will void the manufacturer's warranty.

CAUTION! To avoid the risk of fire or electric shock, ensure that all cables are in good condition and not too small. Do not use the system with damaged or substandard cables.

CAUTION! At high ambient temperatures, the system's cover can become hot enough to burn skin upon contact. Ensure a safe distance is maintained between the inverter and commonly used areas.

CAUTION! Use only the recommended accessories provided by the installer. Using inappropriate devices may cause fire, electric shock, or personal injury.

CAUTION! To reduce the risk of fire, ensure that cooling fans and ventilation openings are not covered or blocked.

CAUTION! Do not operate the system if it has sustained a strong impact, has fallen, or has been otherwise damaged. If the system is damaged, please request an RMA (Return Merchandise Authorization) by phone.

2.2. General Hazard Sources

Strictly follow the instructions in the user manual when operating the system. Any deviation can jeopardize normal operation.

➢ Do not place any objects on or in front of the cabinet!

➢ Avoid devices near the system that generate strong heat or magnetic fields!

➢ Always lock the enclosure and allow access only to authorized personnel!

➢ Do not clean any internal components yourself. Internal system components should only be serviced by technicians!

➢ Clean the storage unit from the outside only with a damp cloth!

➢ Use only the accessories and spare parts recommended by the manufacturer!

➢ All work on the storage system may only be carried out when the system is switched off, and fuses are removed, by qualified electricians certified by Alpha ESS!

➢ Regularly inspect the system for defects or damage to avoid shutdowns or short circuits.

➢ Not allowed as installation locations:

- o Areas where the temperature falls below freezing or wet rooms (Environmental category 2)
- o Areas with humidity above 90% and condensation
- o Areas exposed to salty moisture
- o Flood zones or earthquake-prone areas (additional safety measures required)
- o Environments with ammonia
- o Locations above 3000 meters in altitude
- o Explosive atmospheres
- o Direct sunlight or areas with large temperature fluctuations

2.2.1. Safety Instructions for Battery

This section contains safety instructions that must be followed when working on or with the product. To avoid personal injury and property damage and to ensure the long-term operation of the product, carefully read this section and always follow all safety instructions.

DANGER

Danger to life due to electric shock when live components or DC cables are touched

The DC cables connected to a battery or a PV module may be live. Touching live DC cables can result in serious injury or even death due to electric shock. To avoid this danger:

- Disconnect the inverter and battery from voltage sources and make sure it cannot be reconnected before working on the device.
- Do not touch non-insulated parts or cables.
- Do not disconnect the DC connectors under load.
- Wear suitable personal protective equipment for all work on the product.
- Observe all safety information of this document.

DANGER

Danger to life due to electric shock if live system components in backup mode are touched

Even if the grid circuit breaker and the PV switch of the inverter are disconnected, parts of the system may still be live when the battery is switched on due to backup mode. To avoid this danger:

- Before performing any work on the inverter, disconnect it from all voltage sources as described in this document.

DANGER

Danger to life due to electric shock if touching live components or DC cables when working on the battery

The DC cables connected to the battery may be live. Touching live DC cables can result in serious injury or even death due to electric shock. To avoid this danger:

- Before performing any work on the battery, disconnect the inverter from all voltage sources as described in this document.

DANGER

Danger to life due to electric shock if touching live components when the inverter or battery cover is open

High voltages are present in the live parts and cables inside the system during operation. Touching live parts and cables can result in significant injuries or even death due to electric shock. To avoid this danger:

- Do not open the system cover.

DANGER

Danger to life due to electric shock if live components are touched during a ground fault

When a ground fault occurs, parts of the energy storage system may still be live. Touching live parts and cables can result in significant injuries or even death due to electric shock. To avoid this danger:

- Disconnect the product from voltage sources and make sure it cannot be reconnected before working on the device.
- Touch the cables of the PV array on the insulation only.
- Do not touch any parts of the substructure or frame of the PV array.
- Do not connect PV strings with ground faults to the inverter.

DANGER

Danger to life due to electric shock if an ungrounded PV module or array frame is touched

Touching ungrounded PV modules or array frames can result in significant injuries or even death due to electric shock. To avoid this danger:

- Connect and ground the frame of the PV modules, the array mounting frame and the electrically conductive surfaces to ensure continuous conduction.
- Observe the applicable local regulations.

DANGER

Danger to life due to dangerous voltages on the battery

There is dangerous voltage at the terminal of the battery power cable. Touching the terminal of the battery power cable can result in a lethal electric shock. To avoid this danger:

- Do not open the battery cover.
- Leave the protective caps on the connectors for the battery's power connection until the inverter cables are connected to the battery.
- Disconnect the system from voltage sources and make sure it cannot be reconnected before working on the inverter or the battery.

WARNING

Risk of chemical burns from electrolyte or toxic gases

During normal operation, no electrolyte would leak from the battery and no toxic gases would form. Despite careful construction, if the battery is damaged or a fault occurs, it is possible that electrolyte may leak or toxic gases may form. To avoid this danger:

- Store the battery in a cool and dry place.
- Do not drop the battery or expose it to sharp objects.
- Protect the battery from mechanical damage from vehicles, tools and other objects.
- Only set the battery down on its back or its base.
- Do not open the battery.
- Do not install or operate the battery in potentially explosive atmosphere or areas of high humidity.
- If moisture has penetrated the battery (e.g. due to a damaged housing), do not install or operate the battery.
- In case of contact with electrolyte, rinse the affected areas immediately with water and seek medical attention without delay.

WARNING

Danger to life due to burns caused by electric arcs through short-circuit currents

Short-circuit currents in the battery can cause heat build-up and electric arcs. Heat build-up and electric arcs may result in lethal injuries due to burns. To avoid this danger:

- Disconnect the battery from all voltage sources before performing any work on it.
- Observe all safety information of this document.

CAUTION

Risk of burns from the inverter's hot surface

The surface of the inverter can get extremely hot during operation, and touching it can result in burns. To avoid this danger:

- Correctly mount the inverter so that it cannot be inadvertently touched.
- Do not touch hot surfaces.
- Wait for 30 minutes for surfaces to cool down after switching the system off.
- Observe the safety messages on the inverter.
- During operation, don't touch any parts other than the display panel of the inverter.

CAUTION

Risk of injury due to weight of the inverter and battery

Injuries may be caused if the product is lifted incorrectly or dropped while being transported or mounted. To avoid this danger:

• Transport and lift the product carefully. Take the weight of the product into account. Use lifting and conveyance aids such as lifting trolleys wherever possible.

• Wear suitable personal protective equipment for all work on the product.

NOTICE

Damage to the inverter and battery due to electrostatic discharge

Touching electronic components can result in electrostatic discharge, which can damage or destroy the inverter and battery. To avoid this:

• Ground yourself before touching any component.

NOTICE

Damage due to cleaning agents or inappropriate cleaning methods

The use of cleaning agents may cause damage to the product and its components. To avoid this:

• Clean the product and all its components only with a cloth moistened with clear water.

• Never clean the unit with a hose or with the use of a water jet.

2.2.2. Response to Emergency Situations

NOTICE

The battery is designed to prevent hazards caused by malfunctions.

In case the electrolytes or other internal materials of the battery cells are exposed, the recommended actions in the following list can be performed based on the type of exposure:

1. Inhalation: Leave the contaminated area immediately and seek medical attention.

2. Eye Injury: Rinse eyes for 15 minutes with running water and seek medical attention.

3. Skin Injury: Wash the affected area thoroughly with running water, wash with soap, and seek medical attention.

4. Ingestion: Induce vomiting and seek medical attention.

If a fire breaks out at the battery's installation site, please follow these measures:

1. A breathing apparatus is not required under normal operating conditions.

2. Use an FM-200 or CO2 fire extinguisher for battery fires.

3. Use an ABC fire extinguisher if the fire did not start with the battery and has not yet spread to it.

Instructions for firefighting:

1. If a fire occurs while charging the battery, switch off the circuit breaker of the battery pack, if possible, to safely interrupt the power supply during the charging process.

2. If the battery is not yet on fire, extinguish the fire before the battery catches fire.

3. If the battery is burning, do not attempt to extinguish it; evacuate people immediately.

WARNING

There is a risk of explosion if the batteries are heated above 150°C.
Toxic gases are released when the battery burns. Do not approach.

Effective measures for handling accidents:

1. On land: Isolate the damaged battery in a separate location and call the local fire department or a technical service technician.

2. In water: Stay away from the water and do not touch anything if parts of the battery, inverter, or wiring are submerged.

3. Do not use a submerged battery and contact an Alpha ESS-accredited or battery-accredited technical service technician.

2.2.3. Other Damage Cases

WARNING

Potential risk of fatal electric shock during fire extinguishing or flooding!

The standard measures in case of damage are:

- Turn off the system and disconnect the fuses!

In events such as fire, overheating, or flooding, fast but cautious action can limit damage to the system, your house, and individuals.

2.2.3.1 Overheating

If the system overheats, it may emit smoke and/or trigger an alarm, or show other signs of malfunction. In this case, immediately turn off the system. Contact a qualified technician for inspection and repair.

2.2.3.2 Wet Batteries

If any part of the battery, inverter, or cables is wet or submerged in water, immediately secure the area and ensure no one touches the batteries or related objects. Contact Alpha ESS or an authorized dealer immediately for technical support.

- Under no circumstances should wet batteries be used. Contact a service technician.

2.2.3.3 Damaged Batteries

Damaged batteries are dangerous and must be handled with extreme care. Damaged batteries should never be used as they pose risks to people and property. If the battery module is damaged, pack it in its original hazardous materials container and return it to Alpha ESS or a certified Alpha ESS service partner.

NOTICE

Damaged batteries may become leaky (releasing electrolyte fluid) or produce flammable gas. If you observe this, immediately contact Alpha ESS or a certified service partner.

2.3. Symbols Explanation

Symbols on the type label of the energy storage inverter:

Symbol	Explanation
	Beware of a danger zone This symbol indicates that the product must be additionally grounded if additional grounding or equipotential bonding is required at the installation site.
	Beware of electrical voltage The product operates at high voltages.
	Beware of hot surface The inverter can get hot during operation.
	Danger to life due to high voltages in the inverter, observe a waiting time of 5 minutes. High voltages within the live components of the inverter that can cause lethal electric shocks.Prior to performing any work on the inverter, disconnect it from all voltage sources as described in this document.
	WEEE designation Do not dispose of the product together with the household waste but in accordance with the disposal regulations for electronic waste applicable at the installation site.
	Read the Product documentation
	CE marking The product complies with the requirements of the applicable EU directives.
	Certified safety The product is TUV-tested and complies with the requirements of the EU Equipment and Product Safety Act.
	RCM (Regulatory Compliance Mark) The product complies with the requirements of the applicable Australian standards.
	UKCA marking The product complies with the regulations of the applicable laws of England,Wales and Scotland.

Symbols on the type label and warning label of the battery.

Symbol	Explanation
	Beware of a danger zone This symbol indicates that the battery must be additionally grounded if additional grounding or equipotential bonding is required at the installation site.
	Beware of electrical voltage The product operates at high voltages.
	Risk of chemical burns
	Risk of explosion
	Risk of electrolyte leakage
	Read the Product documentation
	Refer to the instruction for operation Observe all documentations supplied with the product.
	Use eye protection Wear eye protection for all work on the device.
	Fire, naked light and smoking prohibited
	Avoid close proximity. Do not approach the Product unnecessarily.
	Do not short circuit the battery. Touching the short-circuit connection of the battery can result in serious injuries or even death due to electric shock and massive energy release.

	WEEE designation Do not dispose of the battery together with the household waste but in accordance with the disposal regulations for electronic waste applicable at the installation site.
	CE marking The product complies with the requirements of the applicable EU directives.
	RCM (Regulatory Compliance Mark) The product complies with the requirements of the applicable Australian standards.
	UKCA marking The product complies with the regulations of the applicable laws of England,Wales and Scotland.
UN38.3	Marking for transport of dangerous goods The product passes the certifications of the UN38.3.

3. Product Introduction and Application Scenarios

3.1. Naming Convention

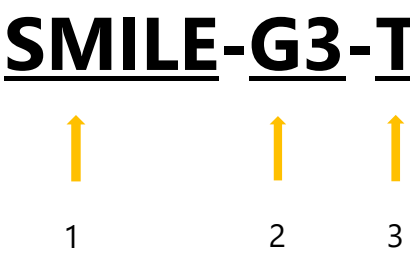

Location	Name	Explanation
1	SMILE	Residential energy storage system
2	G3	3rd Generation of SMILE series
3	T4	**4** kW Inverter with Solar Connections – Three-phase Hybrid energy storage system
	T5	**5** kW Inverter with Solar Connections – Three-phase Hybrid energy storage system
	T6	**6** kW Inverter with Solar Connections – Three-phase Hybrid energy storage system
	T8	**8** kW Inverter with Solar Connections – Three-phase Hybrid energy storage system
	T10	**10** kW Inverter with Solar Connections – Three-phase Hybrid energy storage system

Tab. 3-1. Naming Conventions and Meanings

Complete Designation	Designation in This Document
SMILE-G3-T4-INV SMILE-G3-T5-INV SMILE-G3-T6-INV SMILE-G3-T8-INV SMILE-G3-T10-INV	Energy storage inverter
SMILE-G3-BAT-8.2P	Parallel battery
SMILE-G3-BAT-3.8S	Series battery
SMILE-G3-T4 SMILE-G3-T5 SMILE-G3-T6 SMILE-G3-T8 SMILE-G3-T10	System/Energy storage system/BESS

Tab. 3-2. Summary of the Designations in this Document

3.2. System Introduction



Object	Name	Explanation
1	Cable Cover	Covers for the left wiring area (There are two types of covers, one for the Battery Module(s) wiring and a second for the Inverter connections.)
2	SMILE-G3-T4-INV SMILE-G3-T5-INV SMILE-G3-T6-INV SMILE-G3-T8-INV SMILE-G3-T10-INV	Energy storage inverter
3	SMILE-G3-BAT-8.2P SMILE-G3-BAT-3.8S	Battery

3.3. Product Description

3.3.1. Inverter Electrical Interface & Connections Introduction



Figure 1. SMILE-G3-T4-10-INV

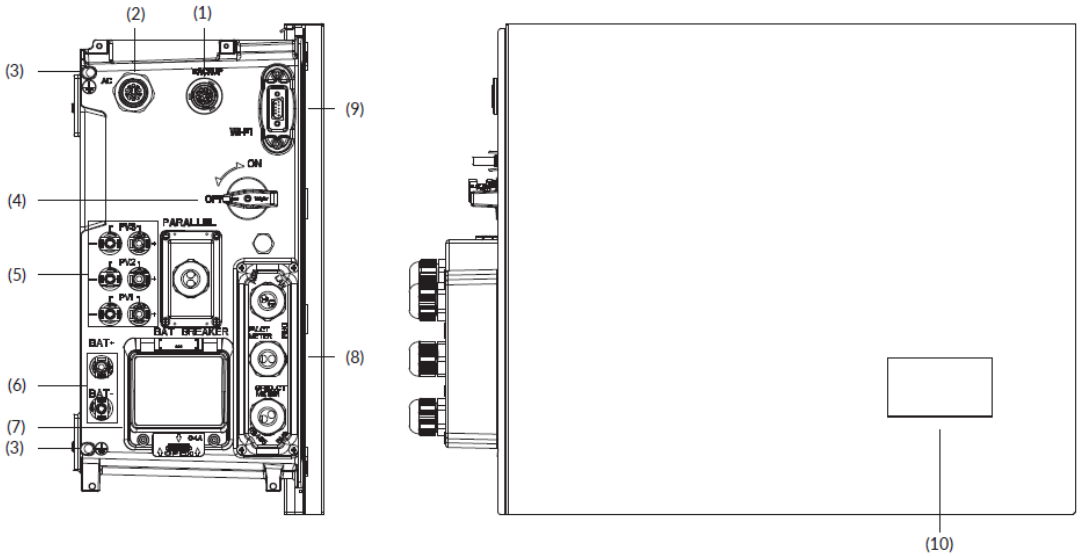

Figure 2. Electrical Interface of the Inverter

Position	Designation
1	Backup Connector
2	Grid Connector (AC Supply)
3	Grounding Point
4	PV Switch*
5	Positive and Negative PV Connectors, PV1/ PV2, PV3
6	Battery Positive Connector Battery Negative Connector
7	Battery Circuit Breaker*
8	Communication Ports (BMS, RS485, Meter, DRM**&RRCR, LAN, AUX1, AUX2), Refer to Chapter 6.6
9	Wi-Fi Port
10	LED Display

* Battery breaker and PV switch of the inverter are switched off when shipped.

** The DRM is only for regions with AS/NZW 4777.2 safety regulations.

3.3.2. Inverter Display Interface Introduction

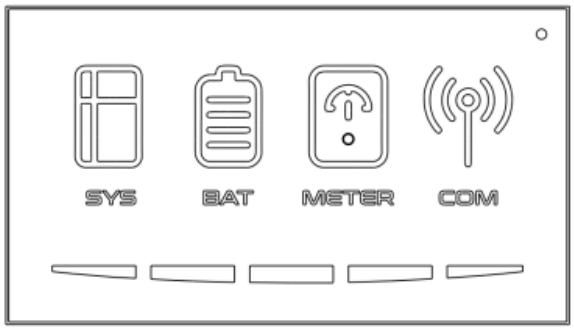

Figure 3. LED Display

These LED indicators provide information about the operation status of the energy storage system.

Status	Explanation	Status	Explanation
	White light The system works normally		**White light** The battery works normally
	**Red light** The system is in fault		**No light** The battery is in fault
	**White light** Meter communication works normally		**White light** Connected to the server
	**No light** Meter lost		**No light** Disconnected to the server

The lower five LED indicators provide information about the State of Charge (SOC) of the batteries connected to this energy storage system.

LED Indicator	SOC	Description
LEDs show the SOC of batteries		SOC < 5%
		5%≤SOC＜20%
		20%≤SOC < 40%
		40%≤SOC < 60%
		60%≤SOC＜80%
		80%≤SOC≤100%

Note that the LED lights provide an approximation of the State of Charge and should be read as an indication and not as a set value.

3.3.3. Battery Display Interface Introduction

During normal operation of battery, three LED indicators on the front cover provide information the State of Charge (SOC) of the battery with white lights glowing and off or flashing (0.5S on, 1.5S off).

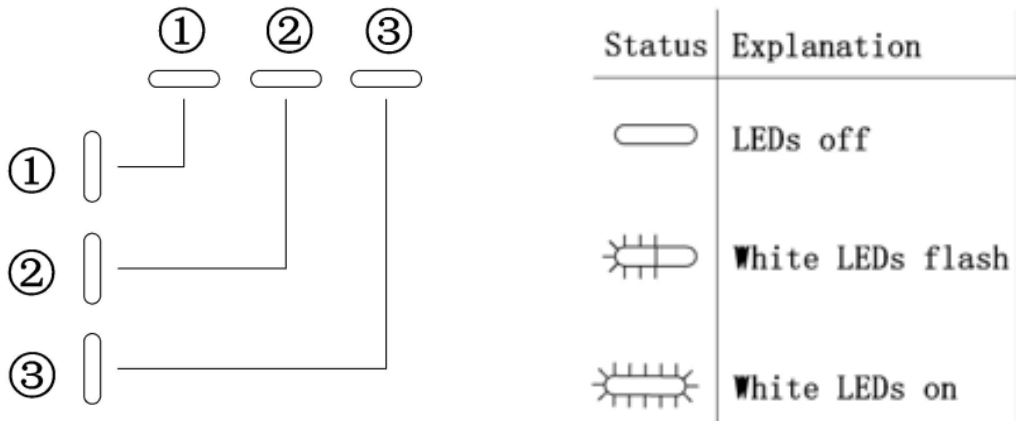

Figure 1. LEDs auf der Batterie

LED Indicator	No.	SOC	Description
LEDs show the SOC status	1		SOC≤10%
	2		10%＜SOC≤30%
	3		30%＜SOC≤50%
	4		50%＜SOC≤60%
	5		60%＜SOC≤90%
	6		90%＜SOC≤100%

State Display
The LEDs indicate the operating state of the product.
Standby: All white LEDs are flashing (0.5s on and 0.5s off).
Normal: White LEDs are glowing or flashing (0.5s on and 1.5s off).
Protection: Yellow LEDs are glowing or flashing (0.5s on and 0.5s off).
Error: Yellow LEDs are glowing or flashing (0.5s on and 0.5s off).
Shutdown: All LEDs are off.

*See the Troubleshooting section in section 9.2.3 for more details

3.3.4. Battery Introduction of SMILE-G3-BAT-8.2P

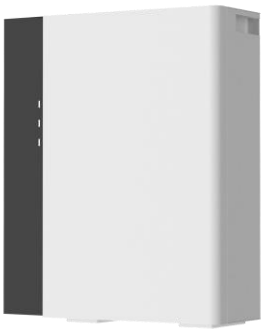

Figure 1. SMILE-G3-BAT-8.2P

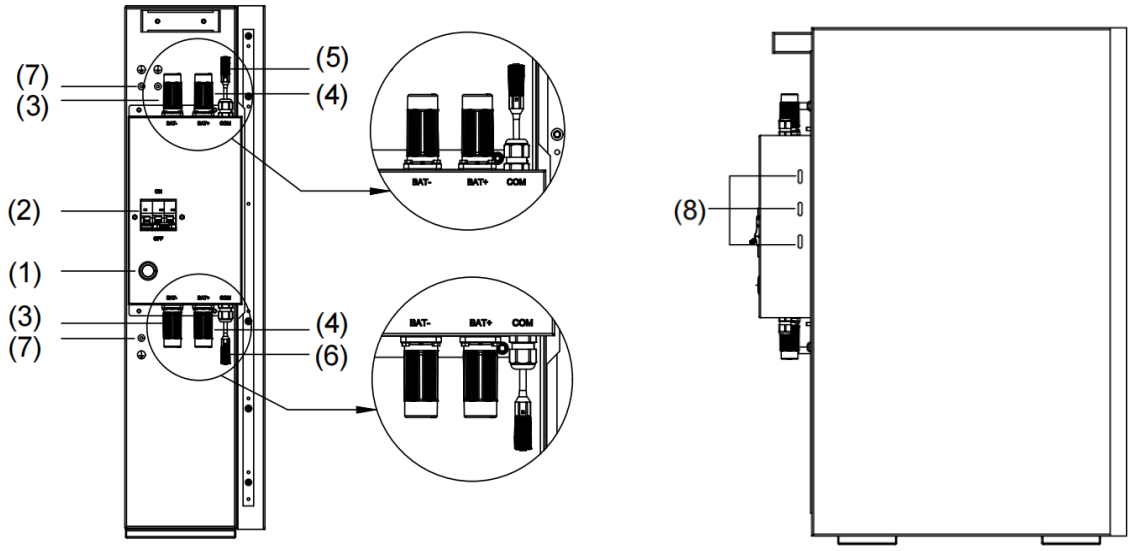

Figure 2. Connection area overview

Position	Designation
1	Battery Power Button
2	Battery Circuit Breaker
3	Battery Negative Cable Connector
4	Battery Positive Cable Connector
5	BMS COM1
6	BMS COM2 (with Terminal Resistor)
7	Grounding Point
8	Battery LED Display

3.3.5. Einführung der Batterie SMILE-G3-BAT-3.8S



Figure 4. SMILE-G3-BAT-3.8S

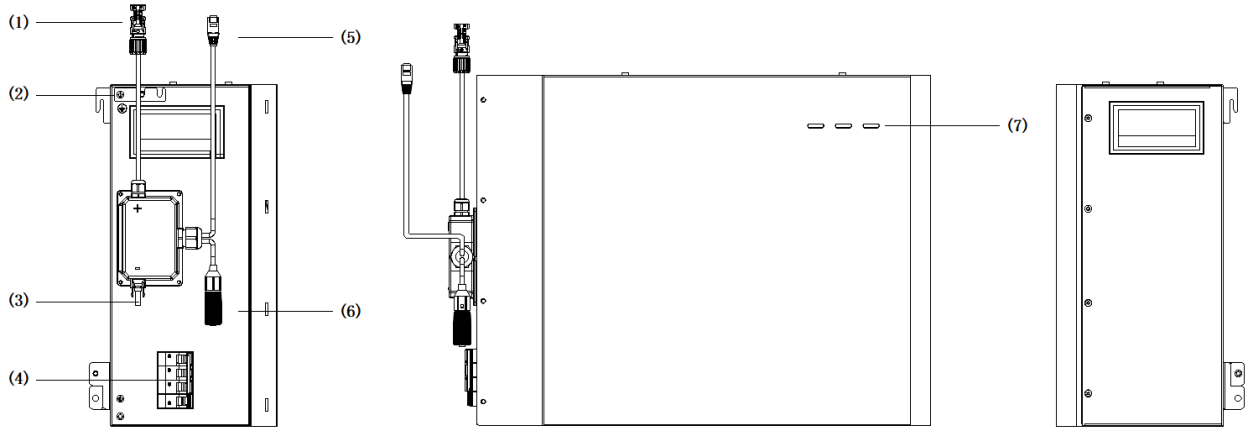

Figure 5. Connection area overview

Position	Designation
1	Battery Positive Cable Connector
2	Grounding Point
3	Battery Negative Cable Connector
4	Battery Circuit Breaker
5	BMS COM1
6	BMS COM2 (with Terminal Resistor)
7	Battery LED Display

3.4. Application Scenarios

SMILE-G3 three phase system (includes inverter SMILE-G3-T4-10-INV, battery SMILE-G3-BAT-8.2P and SMILE-G3-BAT-3.6S/3.8S/4.0S) can be connected as a DC-Coupled systems (mostly new installation), AC-Coupled systems (mostly retrofit), Hybrid-Coupled systems (mostly retrofit, and increase the PV capacity), and Off-Grid (under development) systems as shown in the following diagrams:

3.4.1. DC-Coupled Storage System

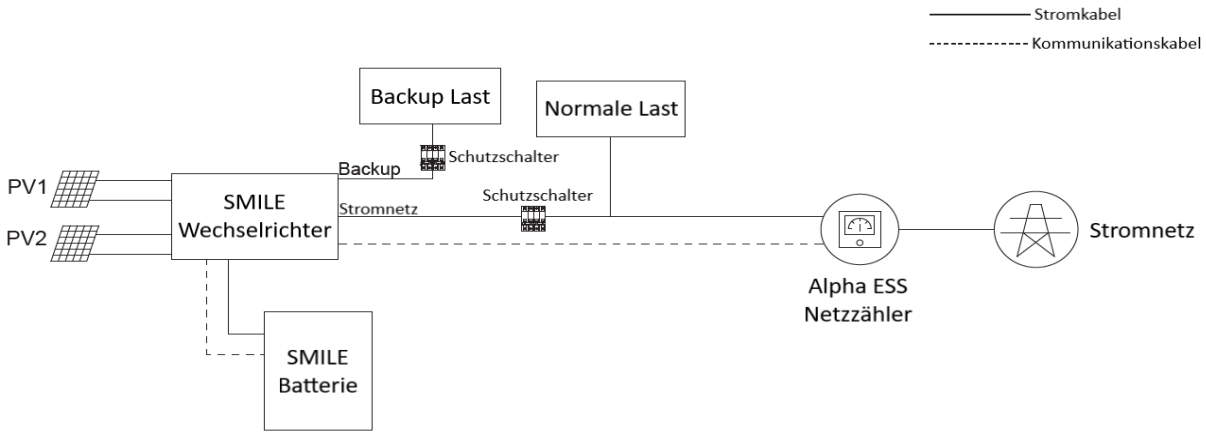

Figure 2. DC-coupled Storage System – Scheme

3.4.2. AC-Coupled Storage System

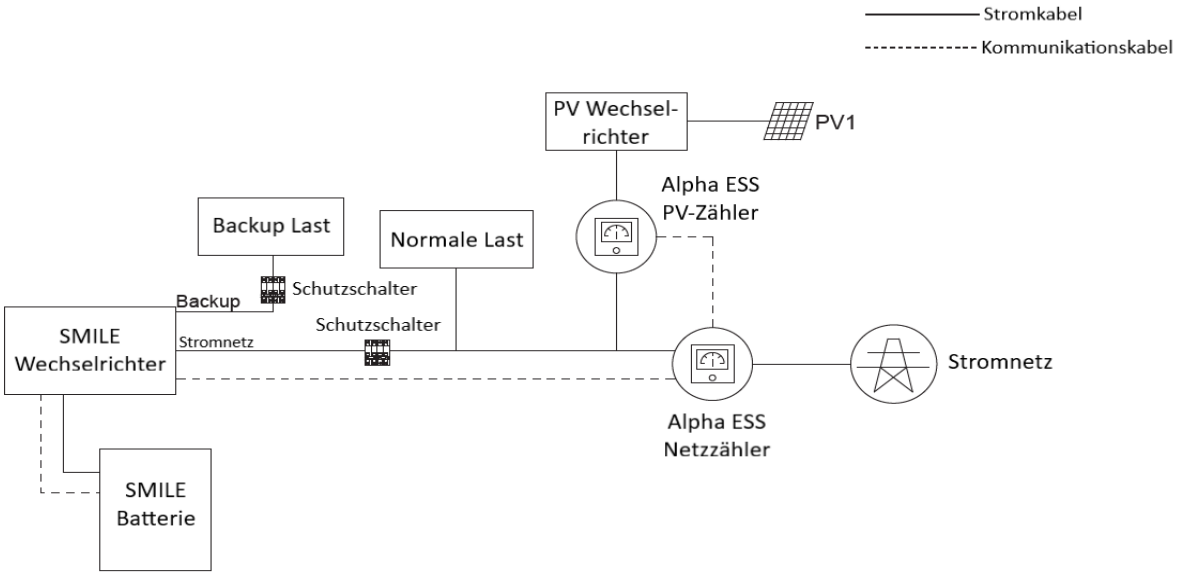

Figure 3. AC-coupled Storage System – Scheme

3.4.3. Hybrid-Coupled Storage System

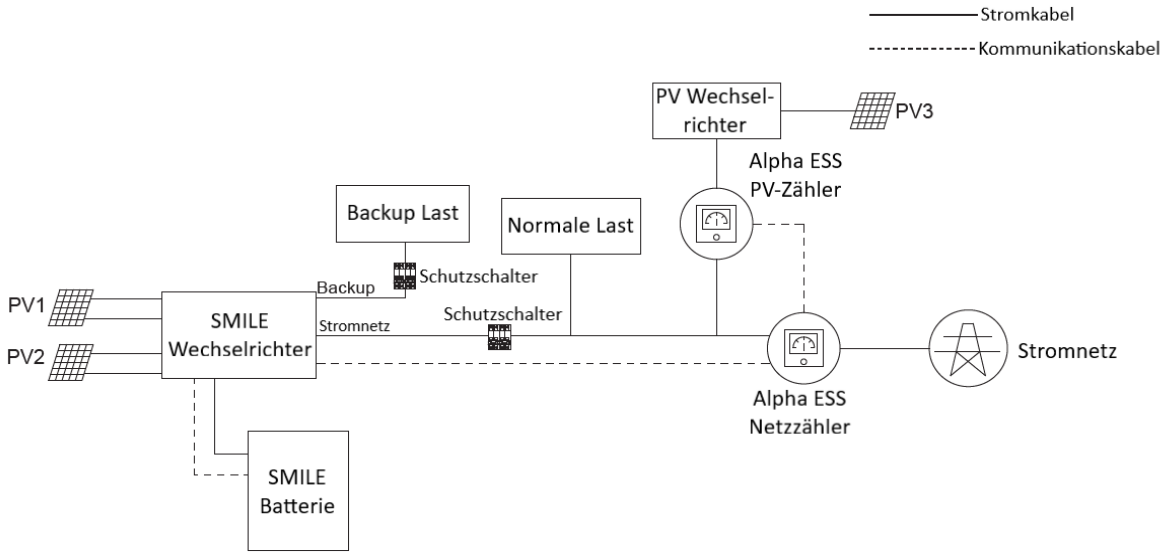

Figure 4. Hybrid-coupled Storage System – Scheme

3.4.4. Off-Grid Storage System

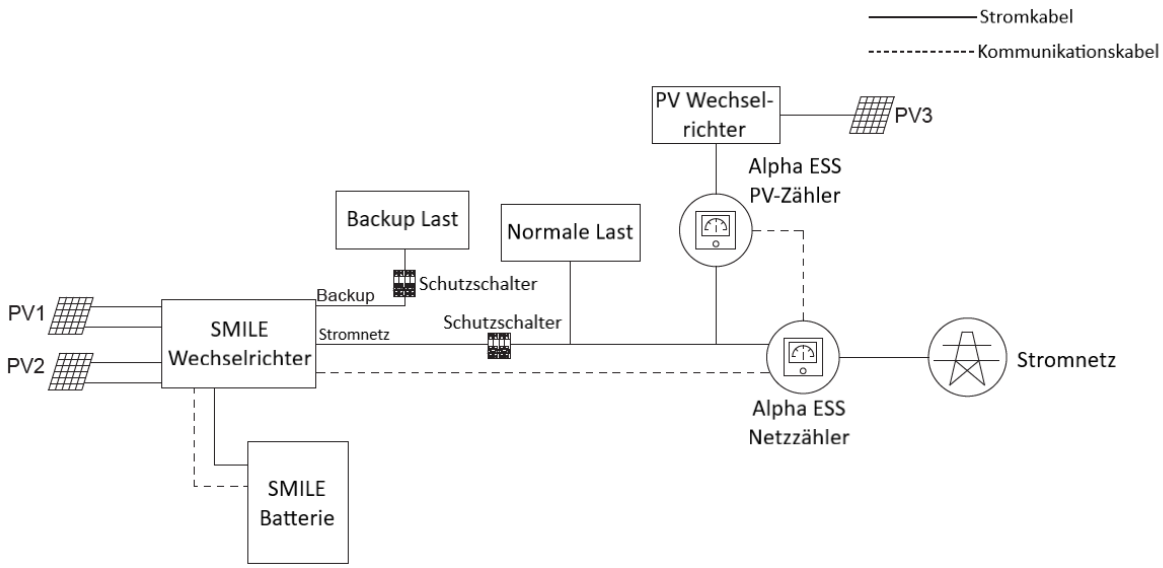

Figure 5. Off-grid (with Generator) Storage System – Scheme

4. Online Monitoring for System Operators

As a system operator, you can monitor all data of your system via online monitoring (website/app). The access data for online monitoring is determined during the registration process. For more information about online monitoring via the website, refer to the corresponding user manual for the online monitoring web server at www.alpha-ess.de.

4.1. Download and Install the App

1. Android device users can download the App through major Android App stores such as Google Play.
2. IOS device users can search for “AlphaESS” in the App Store and download the App.

AlphaESS APP

4.2. Online Monitoring via Website and APP

4.2.1. Registration

System operators can conveniently monitor their new energy storage systems via the Alpha Monitoring from anywhere through the web portal and app. Successful and correct registration of the system operator is part of the complete online registration of the energy storage system. The following steps must be carried out for registration:

WARNING

This registration must be carried out by the system operator or with their consent. All subsequent information concerns the system operator! Incorrect or incomplete data may affect the functionality of the monitoring system and complicate remote maintenance.

➢ Open the website www.alpha-ess.de.



- Click on the upper area labeled "AlphaCloud".
- Click on "Register" and enter the following information.

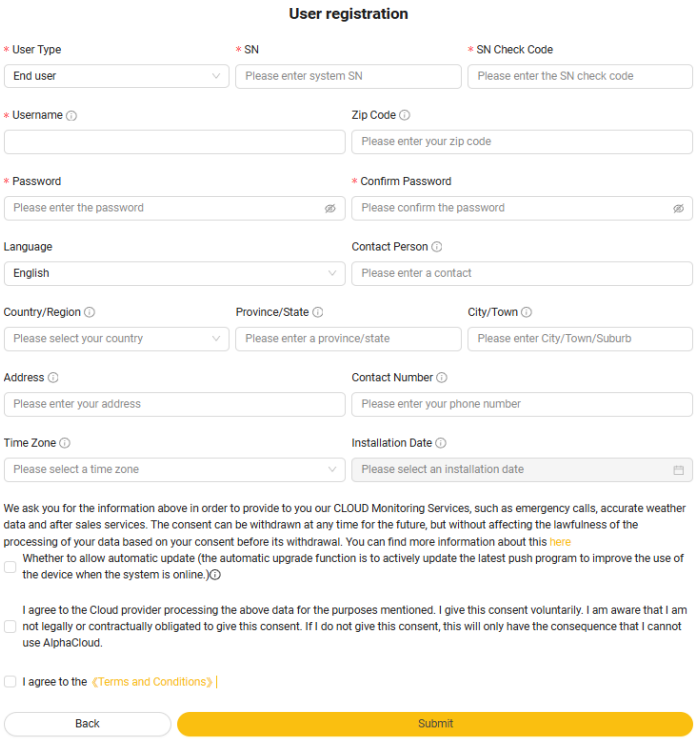

In the form, all mandatory fields are marked with a red star, and you can select yourself as either the end user or installer.

* **User Type:** System Operator

* **Serial Number:** Enter the system serial number (SN, found on the inverter's nameplate)

* **Username:** 5-15 characters/numbers

Note: The username cannot be changed after creation.

***Password**: 5-15 characters/numbers/symbols

* **Confirm password**

* **Country/State/City**
* **Address/Postal code**
* **Language**
* **Contact Person = System Operator**
* **Phone Number (System Operator)**
* **Email (System Operator)**

Further details can be found in the Online Monitoring Web, which can be downloaded from the AlphaESS homepage.

Please read the consent declaration carefully and agree by checking the box to complete the registration process using the "Register" button. You can now use the comprehensive monitoring provided by Alpha ESS. For further information, please refer to the relevant section of the user manual.

4.3. Login

- Open the website www.alpha-ess.de
- Click on the "AlphaCloud" section at the top of the page.
- Enter your username and password, which you set during the registration process. If you have not registered yet, please refer to the instructions in section 4.2.1.

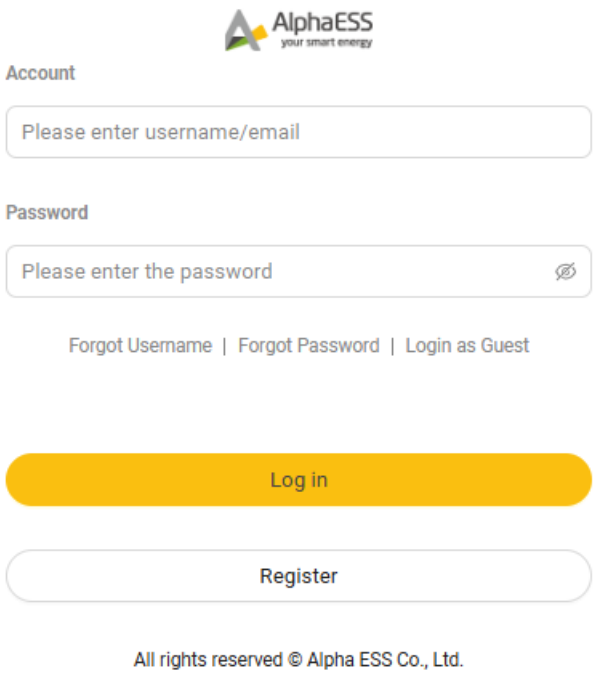

If you have forgotten your password or username, select "Forgot Username?" or "Forgot Password?" on the login page.

You will then receive an email to reset your password or retrieve your username.

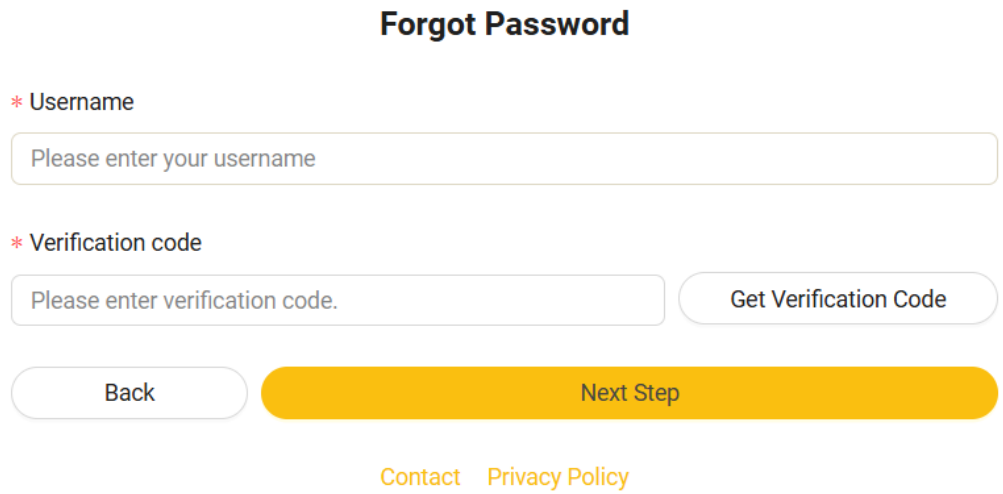

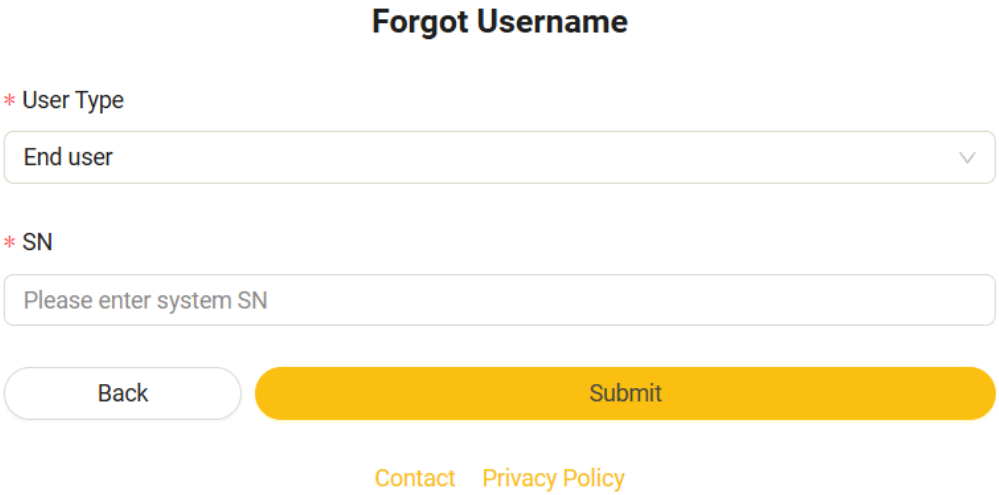

Further information about online monitoring can be found in the corresponding online monitoring web server user manual at www.alpha-ess.de.

5. Commissioning

5.1. Checking before Power-On

No.	Check Item	Acceptance Criteria
1	Installation/Mounting environment	The installation environment is safe and the unit has adequate clearance as per the instruction in this manual as well as in compliance with local standards. The area around the installation should be free from clutter and should not be flood-prone.
2	Battery and inverter mounting	The battery and inverter should be mounted correctly, securely, and reliably.
3	Wi-Fi mounting	The Wi-Fi module should be mounted correctly, securely, and reliably.
4	Cable layout	Cables should be routed neatly and protected adequately where exposed, in accordance with standards.
5	Cable tie	Cable ties should be secured and trimmed evenly and no burr exists.
6	Grounding	The grounding cables should be connected correctly, securely, and reliably. Impedance/resistance checks should be conducted to confirm reliable Earth connections.
7	Switches and breakers status	The PV switch (if there is any) and battery breakers and any breakers connecting to the system should be OFF.
8	Cable connections	The AC cables, PV cables (if there are any), battery power cables, and communication cables should be connected correctly, securely, and reliably.
9	Unused ports	Unused power ports and communication ports should be sealed from water or dust ingress by watertight caps.

5.2. Turning on the System

1) Turn on the battery protection switch, located on the lower left side of the inverter.
2) Turn on the battery protection switch for each battery (each switch is located on the left side of the battery).
3) Skip this step if the batteries are connected in series.
4) Briefly press the power button on all parallel-connected batteries. If more than one parallel-connected battery is installed, press the power button for each battery within 30 seconds. The power button is located directly next to the battery protection switch on each parallel-connected battery.
5) Turn on the AC circuit breaker between the grid connection and the inverter of the energy storage system. (This AC circuit breaker should be labeled "AC disconnect switch for the storage system from Alpha ESS" or something similar.)
6) Turn on the AC circuit breaker between the backup connection of the energy storage system inverter and the backup loads. (This AC circuit breaker should be labeled "AC disconnect switch for the backup power from Alpha ESS" or something similar.)
7) Turn on the PV switch between the PV strings and the inverter, if applicable.
8) Turn on the PV switch on the left side of the inverter (if PV strings are connected to the energy storage inverter).
9) Turn on the AC circuit breaker (if available) between any separate PV inverters and the grid. These separate PV inverters are also referred to as "AC-coupled PV inverters."

5.3. Shutting Down the System

WARNING

After the energy storage system has been shut down, the remaining electricity and heat can still cause electric shocks and burns. Please wear protective gloves and wait 30 minutes until the enclosure has cooled down after the system has been turned off.

1) Turn off the AC disconnect switch between the energy storage inverter and the backup loads.
2) Turn off the PV-DC disconnect switch between the PV string and the energy storage inverter, if available.
3) Turn off the PV switch on the lower left of the energy storage inverter (if PV strings are directly connected to the energy storage inverter).
4) Skip this step if the batteries are connected in series.
5) Hold down the battery power button next to the battery disconnect switch on each parallel-connected battery for 6 seconds to turn off each battery.
6) Turn off the battery protection switch for all batteries (located on the left side of the battery).
7) Turn off the battery disconnect switch, located to the left of the middle of the inverter.
8) Turn off the AC circuit breaker between the energy storage inverter and the grid.

6. Routine Maintenance

Normally, the energy storage system needs no maintenance or calibration.
However, in order to maintain the accuracy of the SOC, it is recommended to perform a full charge calibration for SOC (charge the battery until the charge power is 0W) on the battery at regular intervals (such as two weeks).
Before cleaning, ensure that the system is disconnected from all power sources. Clean the housing, cover and display panel with a soft cloth.
To ensure that the energy storage system can operate properly in the long term, it is advised to perform routine maintenance as described in this chapter.

6.1. Maintenance Checklist

Check Item	Acceptance Criteria	Maintenance Interval
Product cleanliness	The enclosure of the inverter should be free from obstacles or dust.	Once every 6 to 12 months
Product visible damage	The product should be not damaged or deformed.	Once every 6 months
Product running status	1. The product should operate without any abnormal sound. 2. All parameters of the product should be set correctly. Perform this check when the product is running.	Once every 6 months
Electrical connections	1. Cables should be securely connected. 2. Cables should be intact, and in particular, the cable jackets touching the metallic surface should not be scratched. 3. Unused cable glands should be blocked by rubber sealing which are secured by pressure caps.	Perform the first maintenance 6 months after the initial commissioning. Thereafter, perform the maintenance once every 6 to 12 months.

⚠ CAUTION

Risk of burns due to hot enclosure of the inverter

The enclosure of the inverter can get hot during operation.

- Do not touch any parts other than the display panel during operation.
- Wait approximately 30 minutes for the inverter to cool down before cleaning.

7. Maintenance and Troubleshooting

WARNING

Potential danger to life due to improper execution of maintenance, cleaning, and troubleshooting.

- Ensure that maintenance, cleaning, and troubleshooting are only carried out by qualified and Alpha ESS-certified electricians.
- Maintain cleanliness at the work site.
- Loose parts are sources of accidents.

NOTICE

When performing any work on the SMILE series, the service, troubleshooting, and maintenance instructions must be followed.

- Ensure sufficient mounting clearance.
- Avoid tight, confined spaces.
- Turn off the system before performing any work.
- After completing work, restore all connections and connections securely.
- Before turning the power back on, ensure that no one is in the danger area.

NOTICE

All work on the battery should only be performed with the system turned off and the fuses removed.

7.1. Routinewartung

Normalerweise benötigen der Wechselrichter und das Batteriemodul keine Wartung oder Kalibrierung. Um die Genauigkeit der SOC -Anzeige zu erhalten, wird jedoch empfohlen, eine vollständige Ladung (Laden der Batterie, bis die Ladeleistung 0 ist) der Batterie in regelmäßigen Abständen (z. B. zwei Wochen) durchzuführen.

Die genaue Vorgehensweise lautet wie folgt:
Schritt 1: Klicken Sie zunächst unten auf der Startseite auf "**Funktionseinstellung**". Klicken Sie dann auf "**Netzladen/Entladen**".
Schritt 2: Wählen Sie "**EIN**", um die Batterien vom Netz zu laden. stellen Sie bitte die "Ladezeit 1" für die Zeit und SOC auf 100 für Ladestopp ein.
Schritt 3: Wenn die Batterie auf 100% aufgeladen ist und die Ladeleistung 0 W beträgt, bedeutet dies, dass die Batterie-SOC-Kalibrierung abgeschlossen ist.

7.2. Cleaning

To clean the system, disconnect the inverter and battery pack from all power sources. Clean the enclosure, cover, and display with a soft, dry cloth. To ensure that the inverter and battery pack function properly over the long term, you should regularly check and maintain the system as described in this chapter.

Disconnect the system from all power sources before cleaning. Clean the enclosure, cover, and display with a soft cloth.
To extend the lifespan of the system as much as possible, it is recommended to carry out regular maintenance as described in this chapter.

Maintenance Checklist

Item to Check	Acceptance Criteria	Maintenance Interval
Cleanliness	The inverter housing is free of dust and dirt.	Once every 6 to 12 months
Visible Damage	The product is not damaged or deformed.	Once every 6 months
Status	1. No unusual noises from the energy storage system during operation. 2. All product parameters are set correctly.	Once every 6 months
Electrical Connections	1. The cables are securely connected. 2. The cables are intact, especially the cable insulation that touches metal surfaces is not scratched. 3. Unused cable glands are blocked by rubber seals secured by pressure fittings.	First inspection 6 months after commissioning, then every 6 to 12 months.

WARNING

Risk of burns from the hot housing of the inverter.

The inverter housing can become hot during operation.

- Do not touch any part other than the display during operation.
- Wait approximately 30 minutes before cleaning until the inverter has cooled down.

7.3. Troubleshooting

7.3.1. Common Errors

Communication Troubleshooting

LED Indictor	Error Code	LED Display	Description	Troubleshooting
SYS red light is flashing fast	4		Inverter lost	Inverter communication lost 1. Restart the system. 2. Contact service to remotely update the inverter program. 3. If the error persists, contact service for further check.
SYS red light is glowing. METER light is flashing fast if Grid meter lost. METER light is flashing slow if PV meter lost. METER light is off if all meters lost.	5		Grid meter lost	Grid side meter lost 1. Check whether the system configuration parameters of AlphaESS APP or AlphaCloud are correct and whether the meter is used on the grid side 2. Check whether the communication cable of the grid meter is connected correctly (RS485: 3A6B). 3. Check whether the communication configuration parameters of the grid meter are correct (communication address and baud rate). 4. If the error persists, contact service for further check.
	6		PV meter lost	PV inverter side meter lost 1. Check whether the system configuration parameters of AlphaESS APP or AlphaCloud are correct and whether the meter is used on the PV inverter side 2. Check whether the communication cable of the meter of PV inverter side is connected correctly (RS485:3A6B). 3. Check whether the communication configuration parameters of the meter on the PV inverter side are correct (communication address and baud rate). 4. If the error persists, contact service for further check

SYS red light is glowing, BAT light is off	7		BMS lost	BMS lost 1. Check whether the BMS communication connection between the battery and the inverter is correct. 2. Check if the battery is switched on. 3. If the error persists, contact service for further check.

Battery Error Troubleshooting

LED Indictor	Error Code	LED Display	Description	Troubleshooting
SYS red light is on; BAT light is flashing if the battery is faulty.	60002		Circuit_Breaker_ Open	Try to switch on all batteries' breakers. If the error persists, contact service for further check.
	60004		Follower_Battery_ Communication_Lost	Check the communication cables between batteries. If the error persists, contact service for further check.
	60006		Host_Battery_Communication_ Lost	
	60008		Multi_Master_ error	

Inverter Error Troubleshooting

LED Indictor	Error Code	LED Display	Description	Troubleshooting
SYS red light is flashing fast.	100000	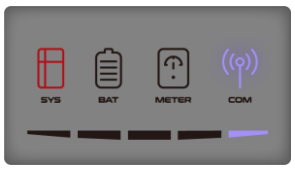	Grid_OVP	1. Check whether grid is abnormal. 2. Confirm whether the grid cable connection is normal. 3. Restart inverter. If the error persists, contact service for further check.
	100001		Grid_UVP	

SYS red light is flashing fast	100002		Grid_OFP	
	100003		Grid_UFP	
	100005		BUS_OVP1	1. Check whether the PV input voltage of PV1, PV2 and PV3 exceeds 1000V. If there is no PV input overvoltage, restart the inverter. If the error persists, contact service for further check.
	100007		Insulation_ fault	1. Check whether PV cable connection is reliable. 2. Check whether PV cable is damaged. If the error persists, contact service for further check.
	100008		GFCI_fault	1. Restart inverter and check whether the error persists. If it so, please call service.
	100010		Grid_relay_ fault	
	100011		Over_ Temperature	1. Check whether the environment around inverter has poor heat dissipation. 2. Confirm whether inverter installation meets the installation requirements.
	100012		PV_Reverse	1.Check whether the PV terminal of the inverter is reversed. If the PV terminal is right, please call service.
	100013		BAT_Reverse	1.Check whether the BAT terminal of the inverter is reversed. If the BAT terminal is right,please call service.
	100017		MPPT1_OVP	Check the PV1/2/3 voltage. If it exceeds 950V, reduce the number of PV modules.

SYS red light is flashing fast.	100021		MPPT2_OVP	Check the PV2 voltage. If it exceeds 950V, reduce the number of PV modules
	100025		BAT_OVP	Check whether the actual battery voltage exceeds the battery charge cut-off voltage by more than 20V.
	100026		BAT_UVP	1. Check whether the actual battery voltage is lower than the battery discharge cut-off voltage. If the error persists, contact service for further check.
	100027		Battery_lose	1. Confirm whether the battery communication cable connection is normal. 2. check whether the battery voltage sampling value is less than 75V. If the error persists, contact service for further check.
	100042		Output_short_ circuit	1. Use a multimeter to test the impedance of the off-grid output. If it is low, check whether the wiring is correct. 2. Restart the inverter. If the error persists, contact service for further check.
	100043		Output_ overload	1. Check whether the load exceeds the rated power. 2. Restart the inverter. If the error persists, contact service for further check.
	100052		Backup_ovp	1. Restart the inverter. If the error persists, contact service for further check.
	100211		Para_CAN	Check the communication cables connection between inverters. If the error persists, contact service for further check.
	100213	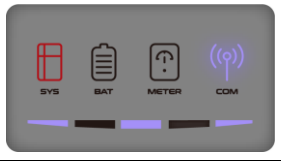	Para_SW_Diff	Check the inverter software versions. If they are inconsistent, upgrade the inverters to the same software version.

	100214		Para_Module_Fault	Check parallel inverter mode Settings. Only one host is allowed.
	100216		Para_Multi_ Master	
SYS red light is flashing fast.	100403		pe_fault	Shutdown inverter and check whether the PE cable and ground cable are properly connected. If the error persists, contact service for further check.
	100412		inv_selfcheck_failure	Restart the inverter. If the error persists, contact service for further check.

Accessories Error Troubleshooting

LED Indictor	Error Code	LED Display	Description	Troubleshooting
SYS red light is on, METER light is flashing fast.	39		EV Charger Lost	EV Charger lost 1. Check whether the EV communication connection between the EV charger and the inverter is normal. 2. Check whether the batteries are switched on. If the error persists, contact service for further check.
	200000		Relay OTP	1. Unplug the charging connector of the EV charger, and wait for about 10 minutes before plugging it back in. If the error persists, contact service for further check.
	200001		Output overload	1. Check whether the load exceeds the rated power. 2. Restart the inverter. If the error persists, contact service for further check.

SYS red light is on, METER light is flashing fast.	200010		AC leakage current	1. Unplug the charging connector of the EV charger, and wait for about 10 minutes before plugging it back in. If the error persists, contact service for further check.
	200011		Input terminal OTP	1. Unplug the charging connector of the EV charger, and wait for about 10 minutes before plugging it back in. If the error persists, contact service for further check.
	200014		Relay abnormal	1. The EV charger has a hardware failure and need to be replaced, please contact service.
	200015		Ground fault	1. Check whether the grounding method is correct. If there is no grounding or the grounding method is wrong, please follow the correct grounding method.
	200016		Reverse phase	1. Shut off the leakage current protection switch of the power distribution cabinet immediately. 2. Check whether the AC input/output cable connection is normal, and verify whether there is an inverse connection of L/N input cables.

7.3.2. Battery Protection Description for SMILE-G3-BAT-8.2P

The three LED indicators on the left front provide information about the protection status of the battery.

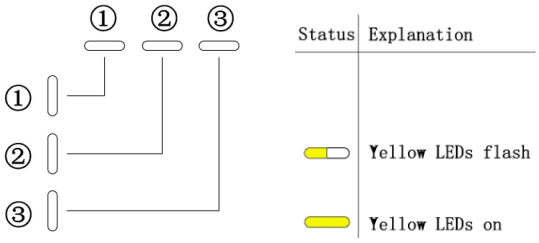

LED Display State	Description	Troubleshooting
	High temperature	Stop discharging and charging until this display state is eliminated and wait for the temperature to drop.
	Low temperature discharge	Stop discharging until this display state is eliminated and wait for the temperature to rise.
	Overcurrent charge	Wait for automatic recovery. If this protection state hasn't be solved, please call service.
	Overcurrent discharge	Wait for automatic recovery. If this protection state hasn't be solved, please call service.
	Cell under voltage	Stop discharging and call service immediately.
	Low temperature charge	Stop charging until this protection state is eliminated and wait for the temperature to rise.

NOTICE

During working mode, if the protection status "Cell under voltage"  appears, please press the power button of the battery 5 times within 10 seconds. The BMS will be forced to turn on the MOSFET of discharge so that the inverter can detect the battery's open voltage and begin charging the battery.

7.3.3. Battery Protection Description for SMILE-G3-BAT-3.8S

The three LED indicators on the front cover provide information about the protection status of the battery.

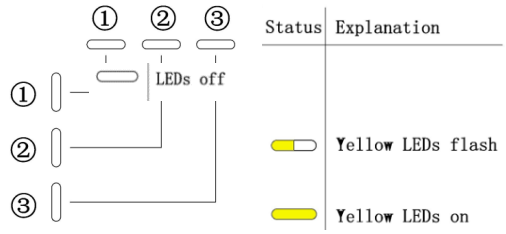

: Yellow LEDs flashing

: Yellow LEDs on

: Yellow LEDs off

LED Display State	Description	Troubleshooting
	Temperature difference	Wait for automatic recovery. If this protection state persists, please call service.
	High temperature	Stop discharging and charging until this protection state is eliminated. Wait for the temperature to drop.
	Low temperature discharge	Stop discharging until this protection state is eliminated. Wait for the temperature to rise.
	Overcurrent charge	Wait for automatic recovery. If this protection state hasn't be solved, please call service.
	Overcurrent discharge	
	Cell overvoltage	Wait for automatic recovery. If this protection state persists for a long time, please call service.
	Cell under voltage	Stop discharging and call service immediately.
	Low temperature charge	Stop charging until this protection state is eliminated. Wait for the temperature to rise.

8. Uninstallation & Return

8.1. Removing the Product

To dismantle the energy storage system, follow these steps:

Step 1: Power off the energy storage system as described in Chapter 5.3 „Shutting down the System“.

Step 2: Disconnect all cables from the system, including communication cables, PV power cables, battery power cables, AC cables, and PE cables.

Step 3: Remove the Wi-Fi module.

Step 4: Remove the cable covers of the inverter and the battery. Remove the right cover of the inverter.

Step 5: Remove the inverter from the top of the battery.

Step 6: Remove the battery wall brackets.

Step 7: Remove the batteries.

8.2. Packaging the Product

If the original packaging is available, put the product inside it and then seal it using adhesive tape.

If the original packaging is not available, put the product inside a suitable cardboard box and seal it properly.

9. Disposal



"Crossed-out wheelie bin"

The symbol of the crossed-out wheelie bin on electrical and electronic devices indicates that the device must be disposed of separately from unsorted household waste at the end of its lifespan.

Energy Storage System

When disposing of the energy storage system, follow the respective legal regulations. Information on the disposal of electrical and electronic devices in the European Union:

Electrical devices are disposed of according to national regulations based on the EU Directive 2002/96/EC on Waste Electrical and Electronic Equipment (WEEE). After August 13, 2005, all electrical and electronic devices delivered may no longer be disposed of with municipal waste or household waste but must be collected separately through specific collection and return systems.

Options for returning old devices:

Owners of old devices from private households can drop them off at collection points provided by public waste disposal authorities or free of charge at collection points set up by manufacturers or distributors under the ElektroG (Electrical and Electronic Equipment Act).

On the website of the "Stiftung elektro-altgeräte register" (www.ear-system.de), you can find a list of collection and return points.

Batteries and Accumulators

Old batteries and accumulators, as well as defective ones, must be separated from the old device before being handed over to a collection point and directed to environmentally sound recycling (this is in accordance with EU Directive 2008/12/EC). Contact your installer for professional dismantling and disposal.
The battery modules installed in Alpha ESS storage systems are part of a battery return system and therefore comply with the requirements of the Battery Act (BattG).

Thank you for reading the Alpha ESS User Manual. If you encounter any problems, simply send us an email at service@alpha-ess.de.